1

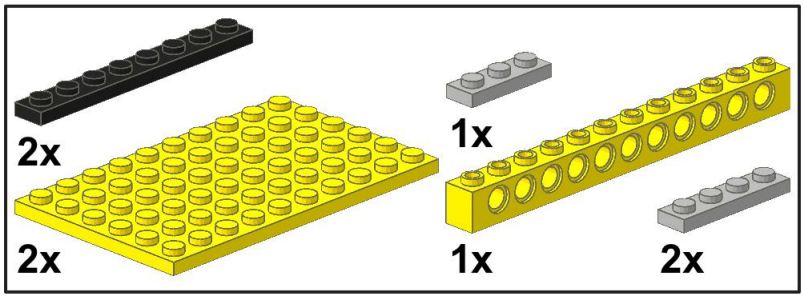

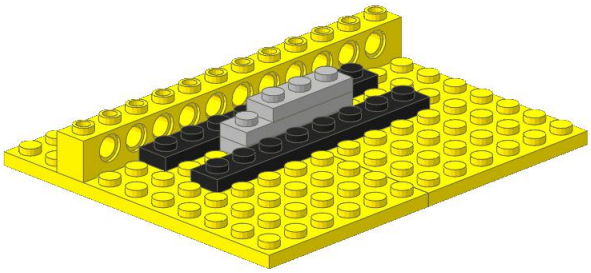

Copyright (c) 2011 www.randomwraith.com. All rights reserved.

2

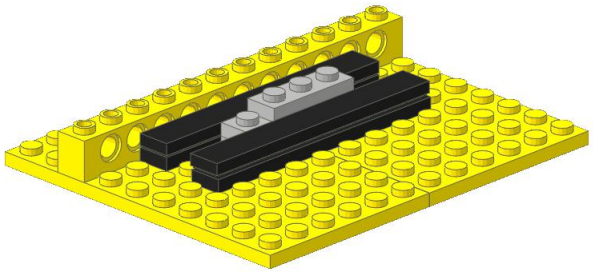

Copyright (c) 2011 www.randomwraith.com. All rights reserved.

3

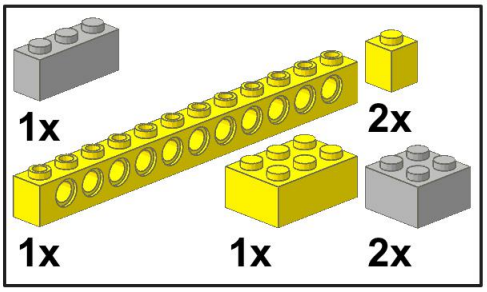

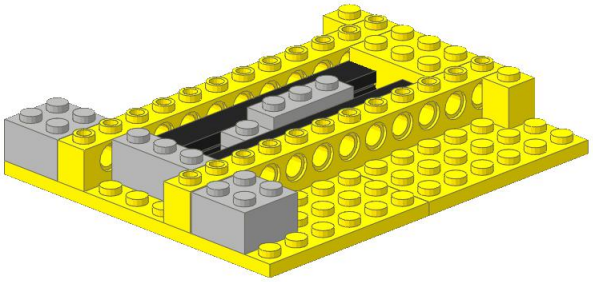

Copyright (c) 2011 www.randomwraith.com. All rights reserved.

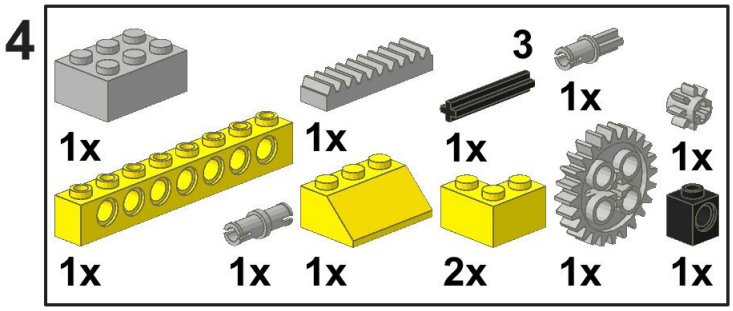

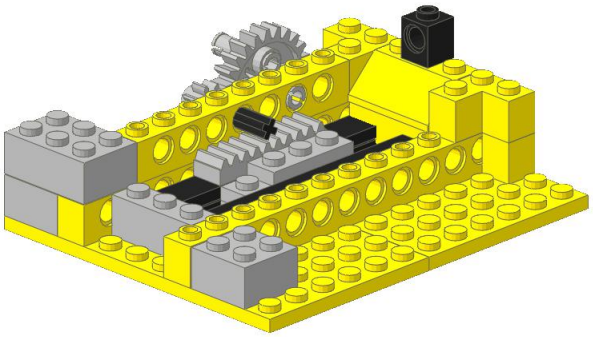

Copyright (c) 2011 www.randomwraith.com. All rights reserved.

5

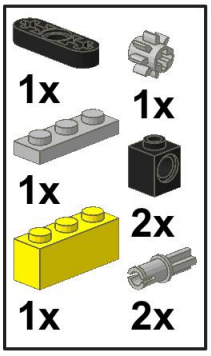

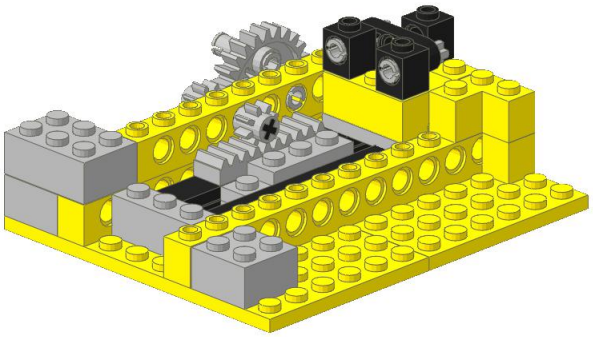

Copyright (c) 2011 www.randomwraith.com. All rights reserved.

6

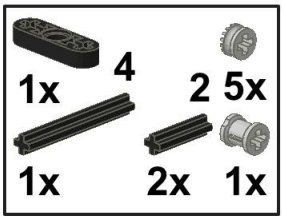

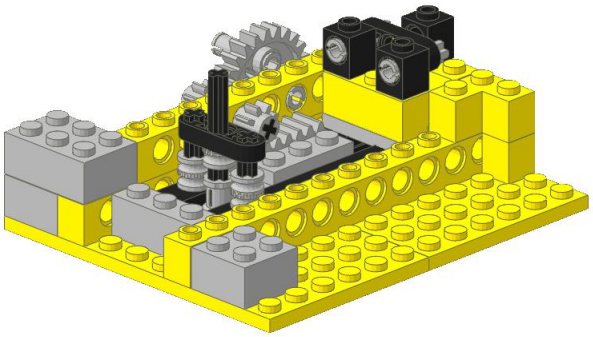

Copyright (c) 2011 www.randomwraith.com. All rights reserved.

7

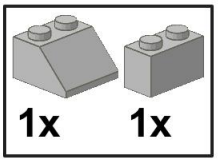

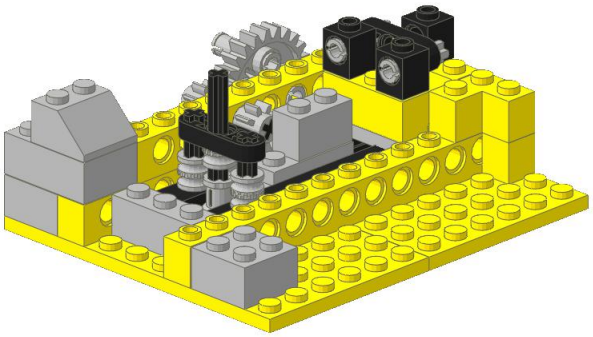

Copyright (c) 2011 www.randomwraith.com. All rights reserved.

8

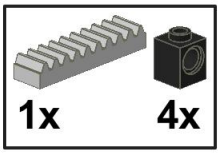

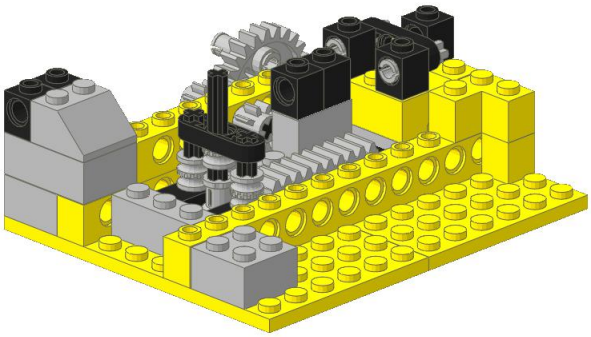

Copyright (c) 2011 www.randomwraith.com. All rights reserved.

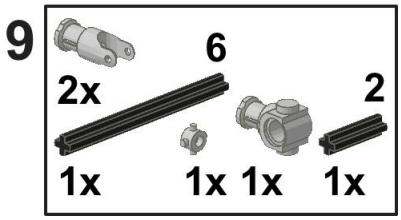

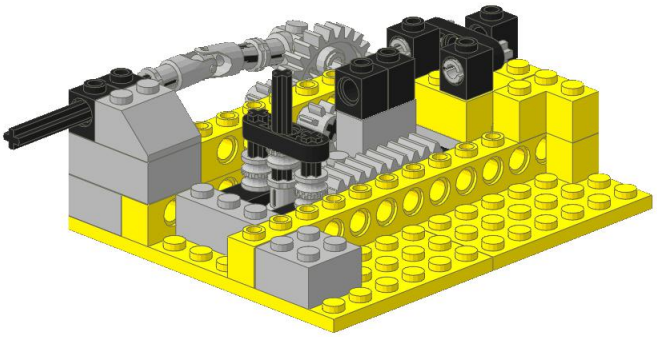

Copyright (c) 2011 www.randomwraith.com. All rights reserved.

10

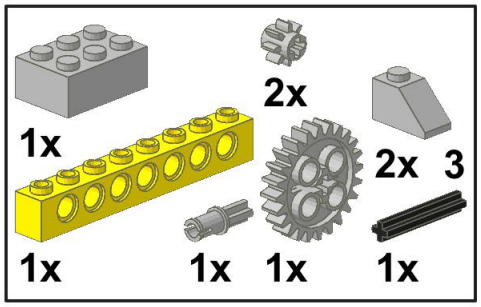

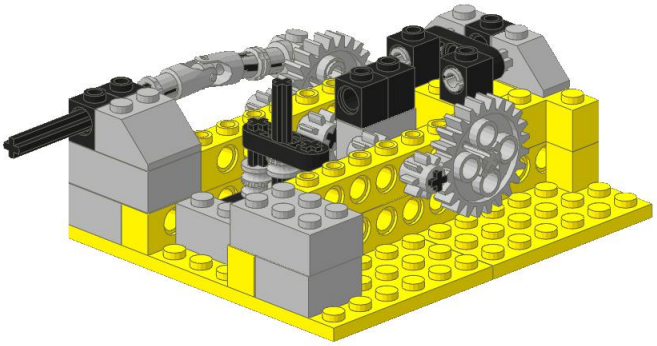

Copyright (c) 2011 www.randomwraith.com. All rights reserved.

11

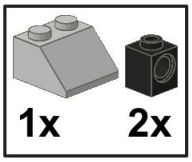

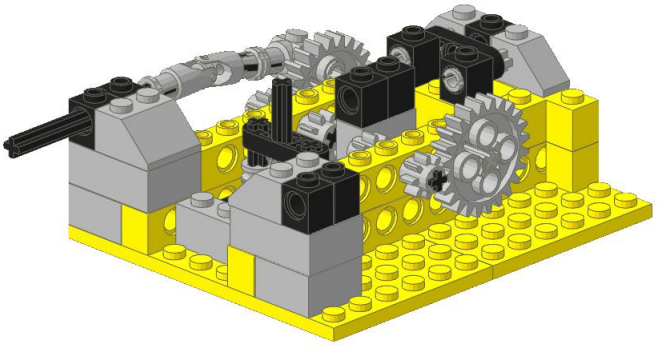

Copyright (c) 2011 www.randomwraith.com. All rights reserved.

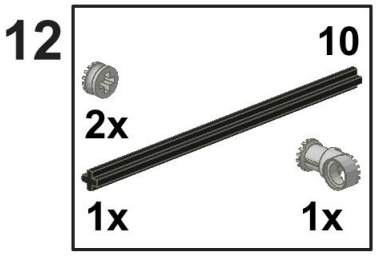

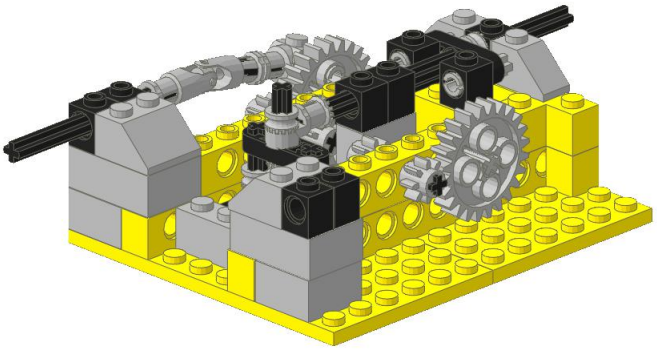

Copyright (c) 2011 www.randomwraith.com. All rights reserved.

13

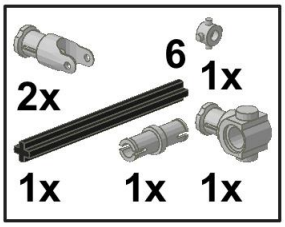

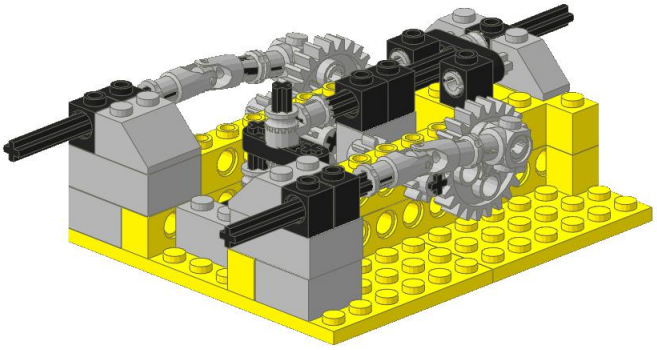

Copyright (c) 2011 www.randomwraith.com. All rights reserved.

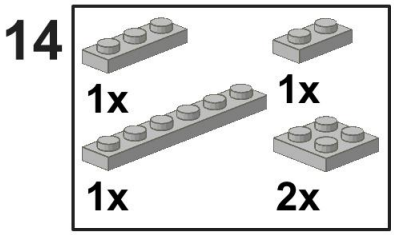

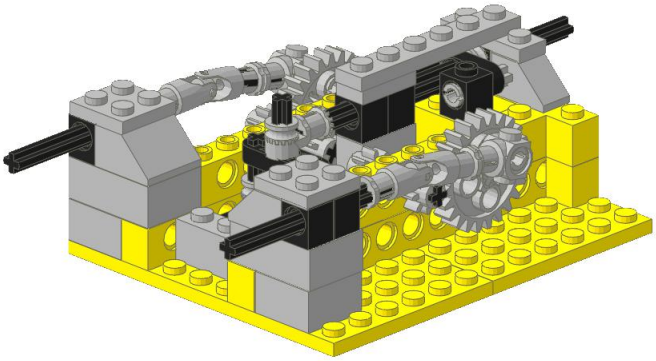

Copyright (c) 2011 www.randomwraith.com. All rights reserved.